日煬科技有限公司
JD Auspice Co., Ltd.

Disconneting Switch
JDA-DS3V-250~800




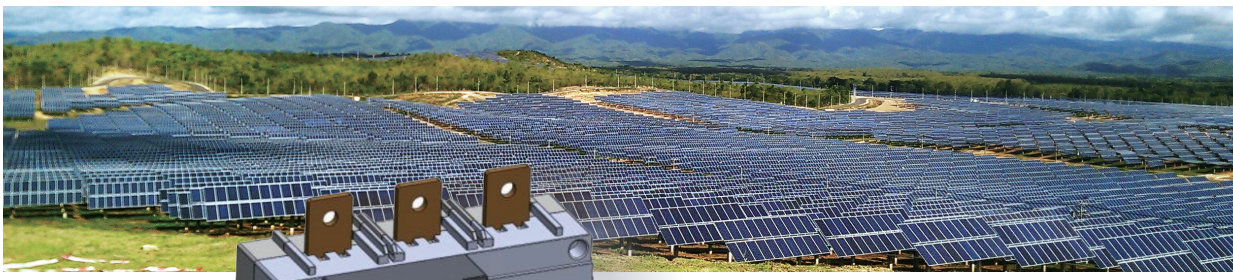

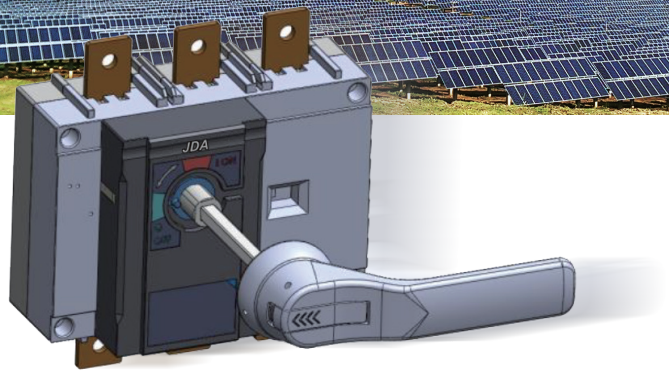

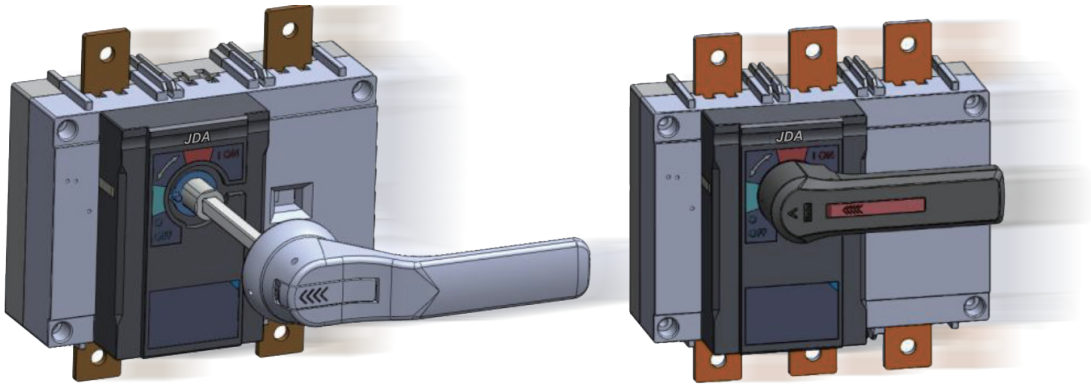

note: subject to change without any notice, JDA pay no responsibility

JD Auspice Co.,Ltd. TEL: 886-2-8991-2796 FAX: 886-2-8991-9298 service@jdauspice.com www.jdauspice.com

1. Application

The JDA-DS3V-250~800 series switch disconnectors are applicable to electric systems with a rated voltage up to DC 1500V and a rated current up to 800 A. It can be used for infrequent close and open, it provides isolation and breaking off circuit It is suitable for photovoltaic 、 energy storage industries.

2. Product Pictures

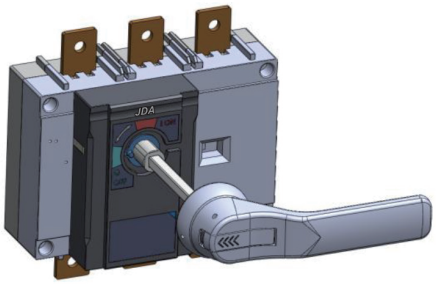

Three poles
(with Outside-cabinet handle)

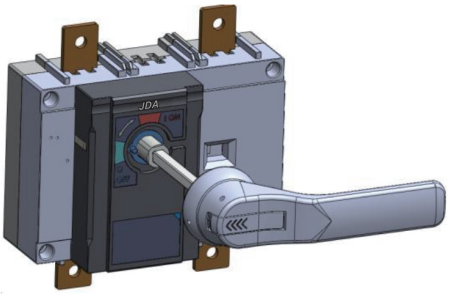

Two poles
(with Outside-cabinet handle)

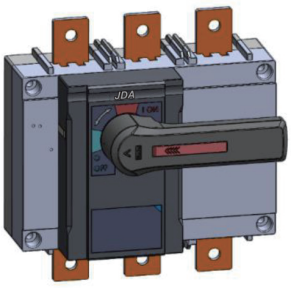

Three
poles(with Inside-cabinet handle)

3. Model and implication

3.1 Product model implication

Model and Description		
JDA - DS 3V - □ / □ □ □		
1 2 3 4 5 6 7		
SN	Name	Code
1	Enterprise code	JDA brand
2	Model	Disconnecting switch
3	Design code	3V
4	Rated current	250-250A ； 350-350A ； 400-400A ； 500-500A ； 630-630A ； 800-800A
5	Number of Poles	2: Two poles 3: Three poles
6	Current type	Z: DC photovoltaic product
7	Handle type	K: Inside-cabinet handle P: Outside-cabinet handle

note: subject to change without any notice, JDA pay no responsibility

3.2 Handle model implication

Model and Description		
HD - 1 - □ / □ 1 2 3 4		
SN	Name	Code
1	Function code	Handle
2	Design code	1
3	Shaft code	200: 200mm 400: 400mm
4	Applicable switch model	DS3-800: Apply to JDA-DS3V-250~800 DS3A-800: Apply to JDA-DS3V-250~800

Note:Protection level of handle is IP65

3.3 Auxiliary contact model implication

Model and Description		
F - 1 - 11 □ / DS3-800 1 2 3 4 5		
SN	Name	Code
1	Function code	Auxiliary contact
2	Design code	1
3	Contacts number	11 : 1NO+1NC
4	Auxiliary switch mounting number	A : 1 pc for each product B : 2 pcs for each product
5	Applicable switch model	DS3-800: Apply to JDA-DS3V-250~800

3.4 Bridging links model implication

Model and Description		
MX 1 / □ 1 2 3		
SN	Name	Code
1	Function code	Bridging links
2	Design code	1
3	Applicable switch model	DS3V-400: Apply to JDA-DS3V-250,350,400 DS3-800: Apply to JDA-DS3V-500,630,800

note: subject to change without any notice, JDA pay no responsibility

JD Auspice Co.,Ltd. TEL: 886-2-8991-2796 FAX: 886-2-8991-9298 service@jdauspice.com www.jdauspice.com

4. Main technical paramete rs

4.1 Main technical parameters switch- disconnectors

Switch-Disconnector			JDA-DS3V-250/350/400			JDA-DS3V-500/630/800		
Thermal current Ith(A)			400			800		
Number of Poles			2、3					
Rated Insulation voltage Ui(V)			DC1500					
Rated impulse withstand voltage Uimp (kV)			12					
Rated short-time withstand current Icw(1s.kA)			DC:10					
Rated short-circuit making capability Icm (kA)			DC:17					
Rated Current In(A)(at +40°C)			250	350	400	500	630	800
Rated operational current Ie(A)	DC-21B DC-PV2	DC1000V(2P)	250	350	400	500	630	800
		DC1500V(3P)	250	350	400	500	630	800
life(times)		Mechanical life(times)	5000					
		Electrical life(times)	200					100
Certificated			TUV、CE					
Operation torque(N.m)			18					
Installation method			M6 Screw installation					
Use category			DC-21B ； DC-PV2					
L×W×H (mm)		2P	240×230×131.5					
		3P	240×230×131.5					
Minimum copper cable cross-section area (mm^2)			120 (1 root)	185 (1 root)	240 (1 root)	150 (1 root)	185 (1 root)	240 (1 root)
Terminal screw specifications(mm)			M10×35					
Tightening torque of copper cable connection(N.m)			10-30					
Weight (Kg)		2P	4.4			4.6		
		3P	4.8			5.1		

Applicable standards : IEC 60947-1; IEC 60947-3

note: subject to change without any notice, JDA pay no responsibility

4.2 Main parameters of auxiliary switch

◆ Electrical parameters

Rated voltage	AC230V	DC250V	DC125V
Rated current	16A	0.3A	0.6 A

◆ Isolation voltage AC1000V
◆ Thermal current Ith: 16A
◆ Frequency: 50/60Hz
◆ Category: AC 15 ,DC 13
◆ Protection: IP20
◆ Electrical life: 20000 t imes
◆ Applicable standards : IEC 60947-5-1 ： 2016
◆ Environmental protection requirements comply with RoHS2.0 directive.

5. Working conditions

1) Altitude≤3000m.
2) Ambient temperature: -35°C ~ +70°C.
3) S torage temperature : -50°C ~ +85°C.
4) Relative humidity The relative humidity of the air does not exceed 50%°C at the maximum temperature of +40°C. The higher relative humidity may be permitted at lower temperature
5) Service place should be without explosive media , gas and dust which are corrosive and conductive, the product should be mounted free from rain and snow.
6) Protection degree: IP20; External handle: IP65.
7) Pollution degree: 3.
8) Installation type: Ⅲ and Ⅳ

note: subject to change without any notice, JDA pay no responsibility
JD Auspice Co.,Ltd. TEL: 886-2-8991-2796 FAX: 886-2-8991-9298 service@jdauspice.com www.jdauspice.com

6. Outline and install ation dimensions

6.1 Two-pole product (with Outside cabinet handle)

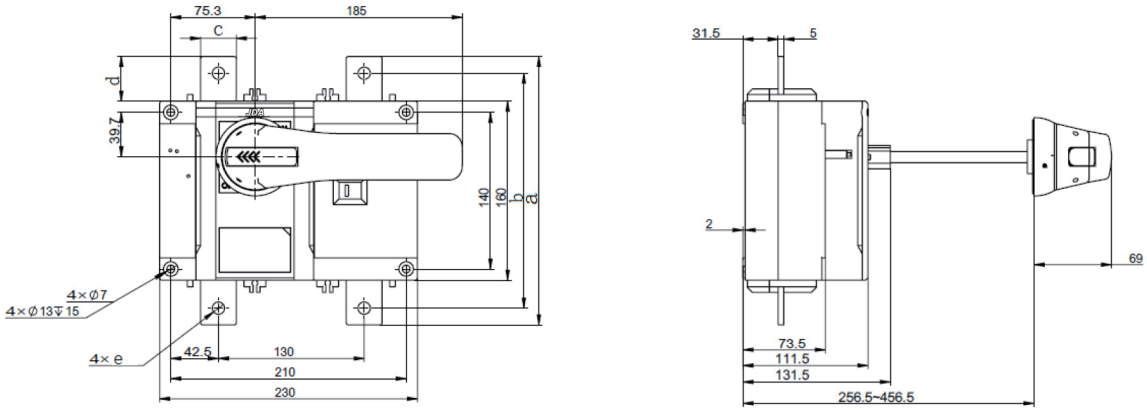

Shell frame	a	b	c	d	e
JDA-DS3V-250~500	240	210	32	40	Φ11
JDA-DS3V-630~800	260	220	45	50	Φ12.5

6.2 T hree pole product with Outside cabinet handle

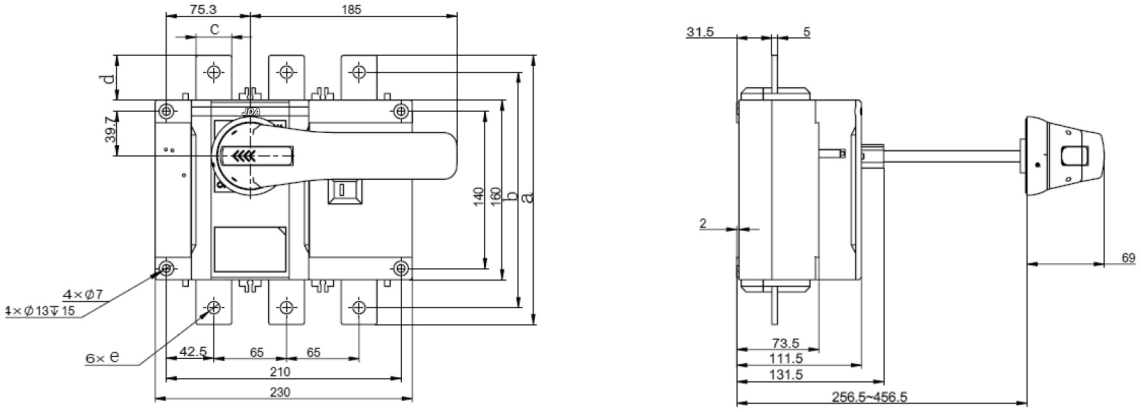

Shell frame	a	b	c	d	e
JDA-DS3V-250~500	240	210	32	40	Φ11
JDA-DS3V-630~800	260	220	45	50	Φ12.5

note: subject to change without any notice, JDA pay no responsibility

6.3 Appearance and Installation Size of the Product Inside of the Cabinet

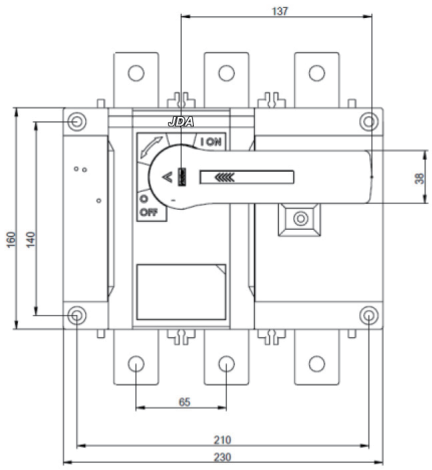

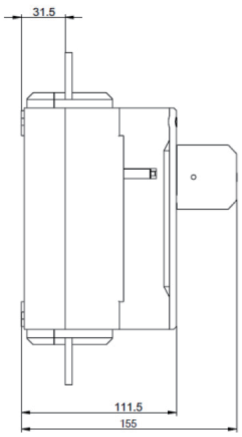

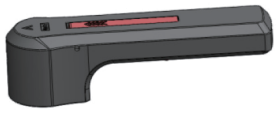

6.4 Dimension drawing of opening of handle cabinet door outside cabinet : HD1-“ A ”/DS3-800

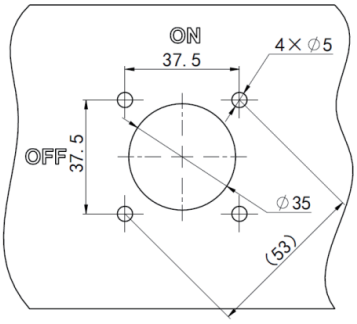

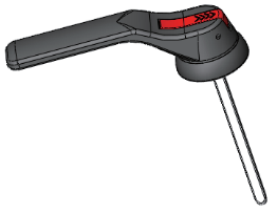

6.5 Dimension drawing of opening of handle cabinet door outside cabinet : HD1-“ A ”/DS3A-800

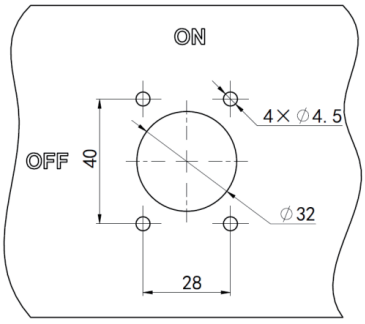



note: subject to change without any notice, JDA pay no responsibility

7. Installation Method

Installation method : screw for switch panel drilling for handle
Installation position: vertical installation or horizontal installation.
AS the 4th follow diagram show, when vertical installation, inspection window of the contact should not be upward.

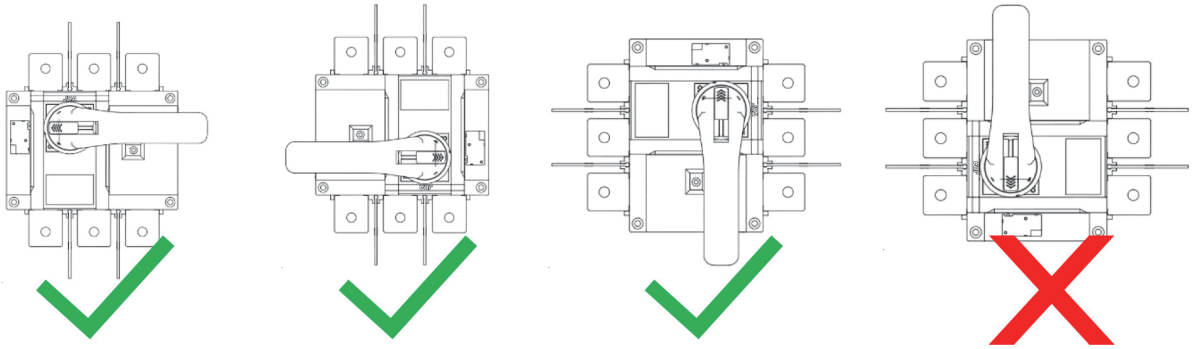

As the diagram show, the product should be mounted within 5° of the vertical mounting plane in case the characters of the product are affected

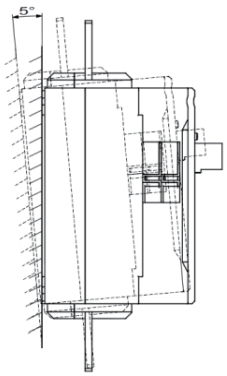

The product should be mounted within 5° of the vertical mounting plane in case the characters of the product are affected

note: subject to change without any notice, JDA pay no responsibility

Status position : as follow diagram show, there are two position, switch on position I/ON and switch off position “O/OFF”

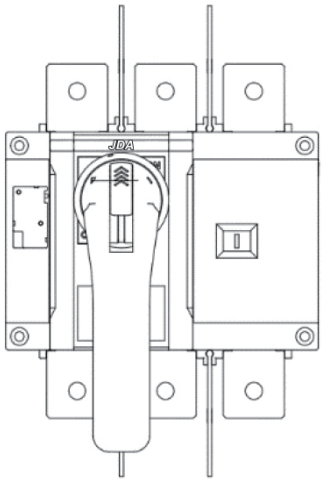

Switch on

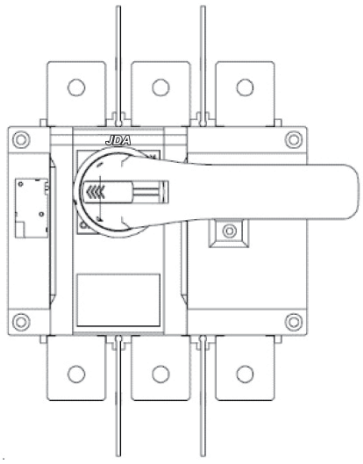

Switch off

8. Wiring Mode (Wiring Diagrams)

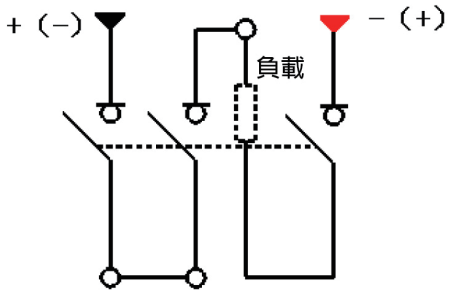

3P(DC1500V)

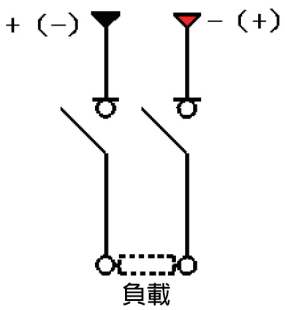

2P(DC1000V)

9. Packaging and storage

9.1 Switch product packaging

No.	Model	Poles	Pcs
1	JDA-DS3V-250/350/400/500/630/800	2P/3P	1pc/box

note: subject to change without any notice, JDA pay no responsibility

9.2 Accessories packaging (Maximum packing capacity)

Name	Number
Handle	2 pcs box, 12 boxes carton
Auxiliary contact	16 pcs box, 40 boxes carton
Bridging links	2 pcs box, 4 boxes carton

9.3 Storage

The product should be transited an d deposited free from rain and snow. The product should be stored in the warehouse where there is ventilation. The relative humidity there should not exceed 80%, and the ambient temperature there is between 40°C and +85°C.
In addition, there should not be acidic, alkaline and corrosive gas in the air.
The product should not be deposited more than 3 years in the above mentioned condi tions since the producing date.

10. Environment

Environmental protection requirements comply with RoHS 2.0 directive.

11. Notices

1) Any quality problem due to disassembly without permission will be the liability of the user;
2) Do not touch the non insulated exposed parts of the disconnecting switch when it is connected to a power supply;
3) Reliable cabling is required to prevent the terminals from being burnt out due to abnormal heat at the terminals;
4) The connecting wires sh ould be fastened on the distribution cabinet frame. The switch should not bear the weight of the conductor. Before fixi ng the conductor, the plane of busbar or cable terminal should be parallel to the plane of switch terminal.
   After connecting wires and switch terminals with bolts, the switch should not bear various mechanical stresses.

note: subject to change without any notice, JDA pay no responsibility

日煬科技有限公司
JD Auspice Co., Ltd.

www.jdauspice.com

@jdauspice

ID : @jdapv



JD Auspice Co.,Ltd. TEL: 886-2-8991-2796 FAX: 886-2-8991-9298 service@jdauspice.com www.jdauspice.com